DRAWING SYMBOLS AND ABBREVIATIONS

DETAIL NUMBER / DETAIL LOCATION (SHEET NUMBER)	DETAIL, SECTION, OR ELEVATION REFERENCE
DETAIL NUMBER / DETAIL LOCATION (SHEET NUMBER)	DETAIL, SECTION, OR ELEVATION REFERENCE
DETAIL NUMBER / DETAIL LOCATION (SHEET NUMBER)	PLAN DETAIL REFERENCE
T.O.W. XX'-XX"	TOP OF WALL ELEVATION
T.O.F. XX'-XX"	TOP OF FOOTING ELEVATION
T.O.C. XX'-XX"	TOP OF CONCRETE ELEVATION
T.O.L. XX'-XX"	TOP OF BRICK / SOAP LEDGE ELEVATION
T.O.M. XX'-XX"	TOP OF MASONRY WALL ELEVATION
(XX'-XX")	TOP OF STEEL ELEVATION
XX'-XX" T.O. SLAB	TOP OF SLAB ELEVATION
XX'-XX" T.O. DECKING	TOP OF DECKING ELEVATION
XX'-XX" JST. BEARING	JOIST BEARING ELEVATION
A	BASE PLATE MARK
S1	SHEARWALL MARK
D1	ROOF DIAPHRAGM MARK
1	REVISION NUMBER MARK
STEP T.O.W.	LOCATION OF STEP IN TOP OF WALL
STEP T.O.F.	LOCATION OF STEP IN FOOTING

A. BOLT	ANCHOR BOLT	L	ANGLE (AISC)
ARCH.	ARCHITECTURAL	LBS.	POUNDS
B.O.	BOTTOM OF	LL	DOUBLE ANGLE (AISC)
BCI	I-JOIST (BOISE CASCADE)	LVL	LAMINATED VENEER LUMBER
BRG.	BEARING	MAX.	MAXIMUM
C	CHANNEL (AISC)	MC	MISC. CHANNEL (AISC)
C.J.	CONTROL JOINT	MIN.	MINIMUM
CMU	CONCRETE MASONRY UNIT	N.S.	NEAR SIDE
CONC.	CONCRETE	o.c.	ON-CENTER SPACING
CONT.	CONTINUOUS	plf	POUNDS PER LINEAL FOOT
CTR.	CENTER	psf	POUNDS PER SQUARE FOOT
DIA.	DIAMETER	psi	POUNDS PER SQUARE INCH
DL	DEAD LOAD	PRE-ENG.	PRE-ENGINEERED MEMBER
EXP.	EXPANSION	PROJ.	PROJECTED
EXT.	EXTERIOR	RE:	REFERENCE; REFER TO
F.O.	FACE OF	REINF.	REINFORCE (MENT)
F.S.	FAR SIDE	REV.	REVISION
FDN.	FOUNDATION	SL	SNOW LOAD
FT.	FEET	STD.	STANDARD
GL	GLU-LAMINATED MEMBER	T&G	TONGUE AND GROOVE
H.A.S.	HEADED ANCHOR STUD	T.O.	TOP OF
HORIZ.; H.	HORIZONTAL	TS	TUBE STEEL (AISC)
HSS	HOLLOW STEEL SECTION	TYP.	TYPICAL
IN.	INCHES	VERT.; V.	VERTICAL
INT.	INTERIOR	W	WIDE FLANGE (AISC)
JT.	JOINT	W.W.F.	WELDED WIRE FABRIC
KIP	1,000 POUNDS	WL	WIND LOAD
klf	KIPS PER LINEAL FOOT	WT	TEE SECTION (AISC)
ksf	KIPS PER SQUARE FOOT		
ksi	KIPS PER SQUARE INCH		

GENERAL STRUCTURAL NOTES

STRUCTURAL DESIGN CRITERIA:

1. These General Structural Notes apply to these Structural Drawings and supplement the project Specifications. Refer to the Project Manual for additional requirements.

2. This project is located in Larimer County, Colorado and has been designed in accordance with the 2003 Edition of the International Building Code (including applicable amendments and supplements).

3. **Design Loads:**

A.	Roof Live Load:	Uniform Snow	30 psf
B.	Floor Live Loads:	Gymnasium Areas	100 psf
		Classrooms	75 psf
		Light Storage	125 psf
		Stairs & Corridors	100 psf
C.	Wind Analysis:	Basic Wind Speed	100 mph (3-second gust)
		Exposure	'C'
D.	Seismic Analysis:	Seismic Design Category 'B'	
E.	Frost / Fdn. Depth:	36" minimum below exterior ground surface to bottom of footing elevation	

4. Structural Design References:

American Concrete Institute (ACI); ACI 301-99, ACI 318-99, ACI 530-02
American Institute of Steel Construction (AISC); ASD 9th Edition
American Institute of Timber Construction (AITC); 4th Edition
American Iron and Steel Institute (AISI)
American Plywood Association (APA)
American Society of Civil Engineers (ASCE); ASCE 7-98
American Society for Testing and Materials (ASTM)
American Welding Society (AWS)
National Design Specification for Wood Construction (NDS); 1997 Edition
International Building Code (IBC)
Steel Deck Institute (SDI)
Steel Joist Institute (SJI)

COORDINATION:

1. Dimensions:
Written dimensions take precedence over scaled dimensions. All dimensions noted within the Structural Drawings shall be verified with the Architectural Drawings. Refer to Mechanical, Electrical, Plumbing, and Architectural Drawings for openings not noted within the Structural Drawings. Any dimensional discrepancies shall be noted in writing for review by the Architect and Structural Engineer.

2. Shop Drawings:
Shop drawings shall be prepared by the fabricator. Copying of these Construction Documents for use as shop drawings will not be permitted.

3. Field Verification:
The Contractor shall verify existing conditions prior to commencement of work, and shall notify the Architect and Structural Engineer for any interpretation or clarification. These construction documents were prepared with information about the existing building provided by others. Limited investigation of the existing structure was undertaken. If the Contractor discovers existing conditions which vary from those shown on these documents he shall notify the Architect and Structural Engineer immediately for further clarification.

4. Field Modifications to Structural Members:
The Contractor is responsible for securing the Architect's and Structural Engineer's approval prior to any cutting, notching, drilling or other modifications which may affect the integrity of the structure. When such modifications have been approved, they are to be completed in accordance with applicable building codes and manufacturer's instructions.

5. Duty of Cooperation:
Issuance of these documents presupposes further cooperation among the Owner, Contractor, Architect and Structural Engineer. Building design and construction are complex, and every contingency cannot be anticipated. Although the Structural Engineer(s) have performed their services with due care and diligence, they cannot guarantee perfection. Any ambiguity or discrepancy discovered through the use of these documents shall be promptly reported to the Architect and Structural Engineer for further clarification. Failure to do so may compound misinterpretation and increase construction costs, and such failure shall relieve the Structural Engineer of responsibility from consequences which may arise.

6. Changes to the Work:
Substitution of noted structural products or "approved equivalent" products will be acceptable only with the written approval of the Structural Engineer. Changes to the Contract Documents made without approval are unauthorized and shall relieve the Structural Engineer of responsibility from consequences which may arise.

7. Jobsite Safety:
These drawings do not include the necessary components for construction safety. The General Contractor shall provide for the jobsite safety of all personnel, work, materials, utilities, equipment and adjacent properties in accordance with accepted codes, regulations and industry practices.

STRUCTURAL CONCRETE:

1. Concrete has been designed and shall be constructed in accordance with the American Concrete Institute (ACI). Refer to the "Field Observations" paragraph of these General Structural Notes for observation requirements. All concrete shall be of stone aggregate, unless noted otherwise. Refer to the Project Manual and Specifications for additional requirements (durability, color, finish, etc.). **The use of any concrete additive containing chlorides is prohibited.**

2. Minimum 28-day compressive strength shall be as follows:

A.	Foundation Walls	3,000 psi
B.	Footings	3,000 psi
C.	Slabs on Grade	4,000 psi
G.	All other concrete	3,000 psi

3. Reinforcing is to be new billet steel ASTM A615 Grade 60 (field bent or welded bars shall be ASTM A706, Grade 60). No welding of reinforcement is permitted unless detailed. No splices of reinforcement are permitted except as detailed or authorized by Structural Engineer. Provide corner and bars to match all horizontal reinforcing. **Provide minimum (2)#5 bars around all sides of all openings in concrete and extend 2'-0" minimum past edges of openings.** Where permitted, use contact lap splices (40 bar diameters minimum lap). Welded wire fabric (W.W.F.) shall be in accordance with ASTM A185. Provide a minimum (1) full mesh lap at splice locations.

4. Placing of Reinforcement: Form ties are to be used for bar supports only when the clear dimensions shown on the details can be maintained. Provide wire chairs, bolsters, additional reinforcement, and accessories necessary to support reinforcement at position shown in the Structural Drawings. Support of reinforcement on wood, brick, or other unacceptable material will not be permitted.

5. The following minimum concrete cover over reinforcing shall be provided unless noted otherwise:

A.	Concrete cast against and permanently exposed to earth	3 inches
B.	Concrete exposed to earth or weather (#6 bars and larger)	2 inches
C.	Concrete exposed to earth or weather (#5 bars and smaller)	1-½ inches
D.	Concrete not exposed to earth or weather	¾ inch
E.	Piers, Beams and Columns	1-½ inches

STRUCTURAL STEEL:

1. Structural steel, including embedded angles, plates or other sections has been designed and shall be detailed and erected in accordance with the American Institute of Steel Construction (AISC), ASD Specifications and Code of Standard Practice. Steel detailing and erection shall accommodate provisions of AISC and OSHA standards (including OSHA Steel Erection Standard Part 1926, Subpart "R").

2. Minimum yield strengths (Fy) are 35 ksi for pipes (ASTM A53, Grade B), 46 ksi for tubes (ASTM A500, Grade B), 50 ksi for wide flange members (ASTM A572, Grade 50), and 36 ksi for all others (ASTM A36).

3. Connections:
Use standard framed beam connections meeting requirements of the AISC Manual of Steel Construction (ASD). Use 3/4" diameter minimum A325N bolts or welded equivalent. Minimum welds are per AISC, and not less than 3/16" continuous fillet using E70XX electrodes (unless noted otherwise). Welding of rebar anchors to angles or plates shall be completed to develop a minimum 150% of the yield strength of the reinforcing bar. Headed stud anchors shall conform to AWS D1.1 and shall be automatically end welded in the shop (unless noted otherwise). See specifications for testing requirements.

4. Open Web Steel Joists and Joist Girders:
Design, fabrication and erection shall be in conformance with manufacturer's suggested specifications and the requirements of the Steel Joist Institute. Steel detailing and erection shall accommodate provisions of AISC and OSHA standards (including OSHA Steel Erection Standard Part 1926, Subpart "R").

5. Steel Roof Deck:
Design, fabrication and erection shall be in conformance with manufacturer's suggested specifications and the requirements of the Steel Deck Institute. Steel roof deck shall be 1-½" deep Type B (22 gauge), unless otherwise noted. Provide Vulcraft 1.5B22 or approved equivalent. Deck panels are to be 36" wide and continuous over a minimum of 3 spans. Weld deck to all supports as indicated in the Drawings. Form deck with nested side laps allowing screwed seam connection. Provide L 2-½ x 2-½ x ¼ steel angle framing around openings larger than 6". Steel detailing and erection shall accommodate provisions of AISC and OSHA standards (including OSHA Steel Erection Standard Part 1926, Subpart "R").

6. Cold-Formed Steel Studs:
Cold-formed steel shall be detailed and erected in accordance with the American Iron and Steel Institute (AISI). Stud members shall be 6" deep, 1-5/8" wide, 18 gage "C" studs with minimum sectional properties Ix = 2.44 in.4 and Sx = 0.81 in.3 formed from steel that meets the requirements of ASTM C955, Grade C (minimum yield strength of 33 ksi). Provide lateral stud bridging per manufacturer's recommendations.

FOUNDATIONS:

1. The structure shall be founded upon spread footings placed on undisturbed natural soils or compacted structural fill with a maximum allowable bearing pressure of 2,500 psf and a minimum dead load bearing pressure of 500 psf.

2. Retaining walls have been designed in accordance with the following design values:

A.	Coefficient of Friction	0.40
B.	Lateral Earth Pressure	45 pcf
C.	Passive Pressure	250 pcf

3. Provide 1½" void below all non-bearing partitions constructed upon slabs on grade.

4. **Refer to Geotechnical Report #20065032, dated 03-30-2006, prepared by Terracon; Ft. Collins, Colorado for other pertinent soils information. The Contractor shall be fully familiar with all aspects of the report before beginning construction and shall refer to the report for specifications and details for placement of structural fill, vapor barriers, gravel layers, perimeter drains, and any other soils related items.**

FIELD OBSERVATIONS:

1. The Contractor shall inform the Structural Engineer at least 72 hours prior to casting any concrete so as to allow the Structural Engineer the opportunity to review the placement of reinforcement and embedments.

Contact Sundquist Design Group, Inc. at (303) 504-4885.

SPECIAL INSPECTIONS:

1. It is the responsibility of the Contractor to coordinate all structural inspections as required by governing building codes and the Construction Documents. A qualified independent testing company is to provide Special Inspections for portions of the Work, as indicated in the Construction Documents and as required by local jurisdictions.

2. The Special Inspector shall be responsible for completing, maintaining, and resubmitting all special inspection logs and forms required by Local Building Officials.

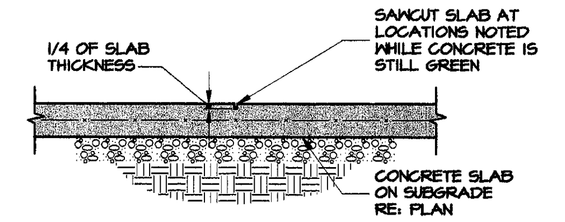

1 / S-1 Typical Slab Control Joint (C.J.)
3/4"=1'-0"

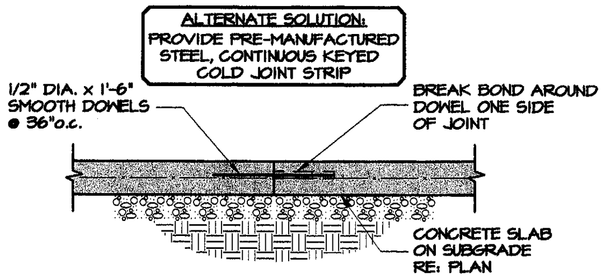

2 / S-1 Typical Slab Construction Joint
3/4"=1'-0"

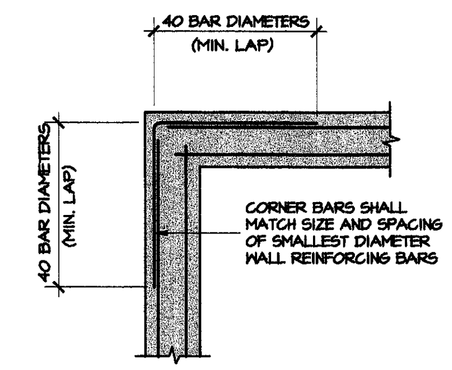

3 / S-1 Typical Corner Reinforcing
3/4"=1'-0"

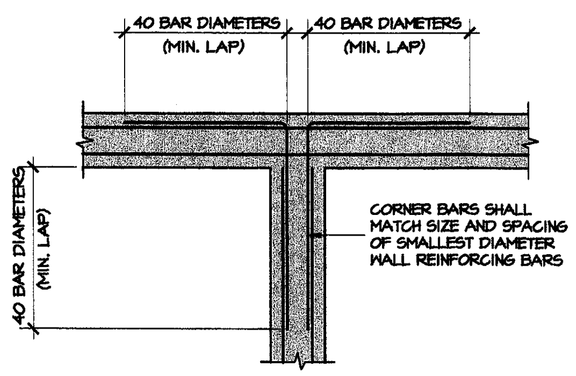

4 / S-1 Typical Intersection Reinforcing
3/4"=1'-0"

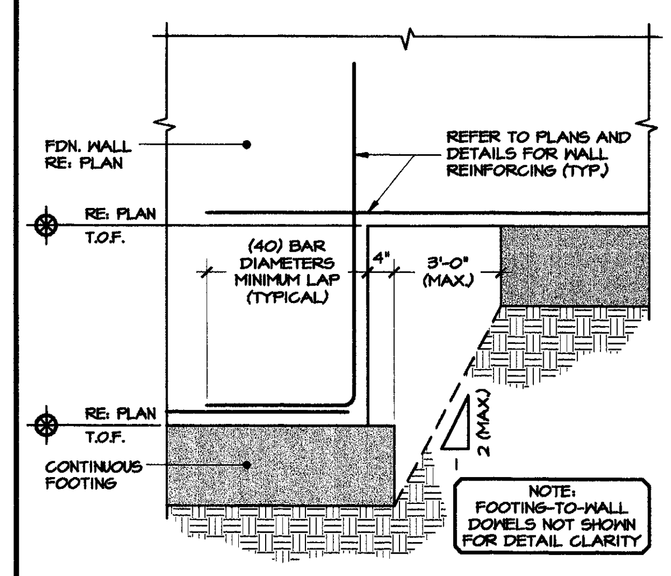

5 / S-1 Typical Footing Step Detail
3/4"=1'-0"

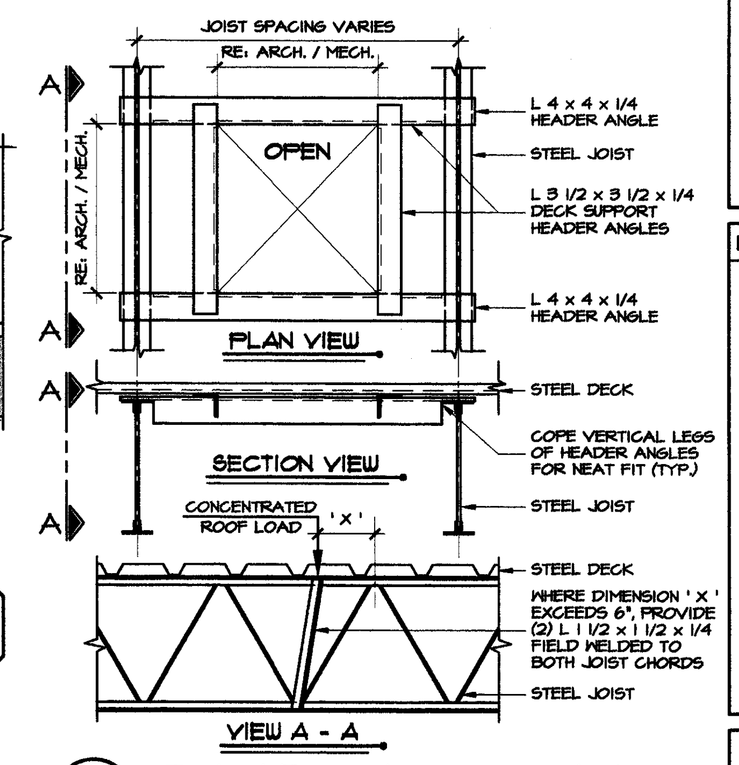

6 / S-1 Typical Framed Opening Detail
3/4"=1'-0"

MELLIN & ASSOCIATES ARCHITECTS, P.C.
5570 East Yale Avenue
Denver, CO 80222
Phone: 303-881-2846
Fax: 303-758-1689

©MELLIN & ASSOCIATES ARCHITECTS, P.C.

CONSULTANTS:

STRUCTURAL ENGINEER
Sundquist Design Group
12136 West Bayaud Avenue
Suite 102
Lakewood, CO 80228
303-504-4885
303-504-4898 Fax
Contact: Joe Sundquist P.E.

SUNDQUIST Design Group
Structural Engineering with Soul Solutions.

MECHANICAL ENGINEER
Given & Associates, Inc
735 South Xenon St., Suite 201
Lakewood, CO 80228
303-716-1270
303-716-1272 Fax
Contact: Jeff A Given P.E.

ELECTRICAL ENGINEER
Alber Engineering Inc
10499 Bradford Rd., #102
Littleton, CO 80127
303-985-3320
303-987-2304 Fax
Contact: Clarence Bernal

PROJECT TITLE:

Classroom Addition & Cafeteria Renovation for Cache La Poudre Elementary School

Poudre School District

ISSUED

REVISIONS

D.D. SET	04-06-06
95% CD's	05-01-06
100% CD's	05-08-06
AB AS-BUILT	06-08-07

TITLE

STRUCTURAL NOTES AND TYPICAL DETAILS

S-1

SHEET S-1 OF 24